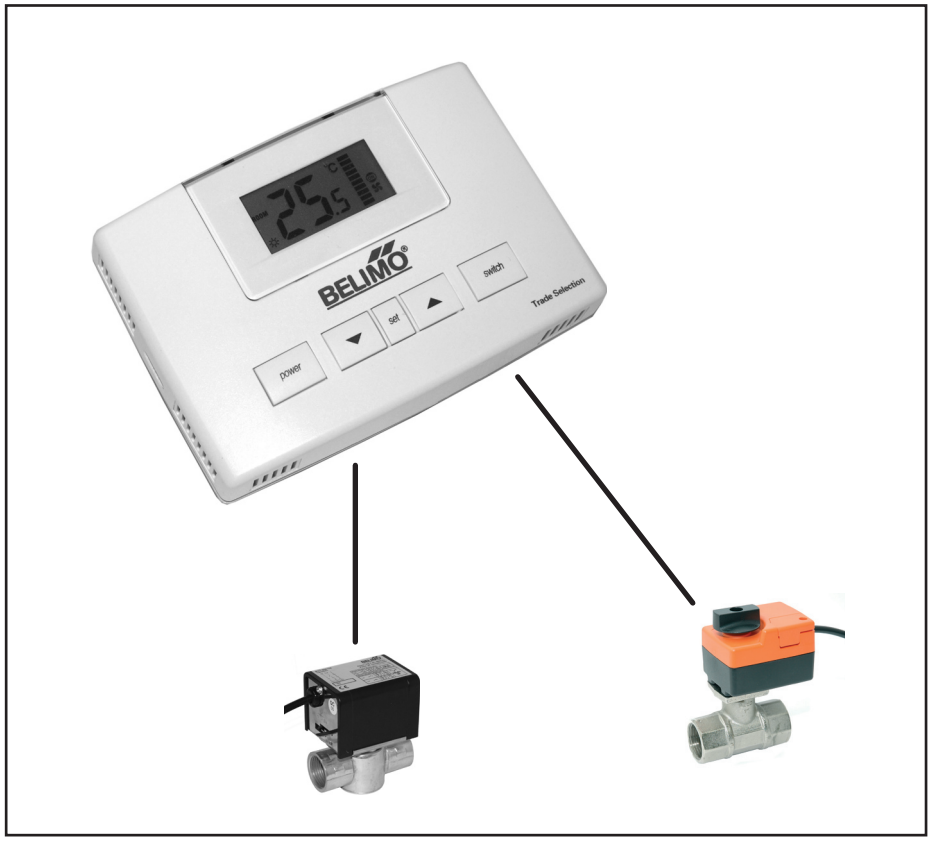

Fan Coil Controller EXT-F2000PS-..

Table of contents

Fan Coil Controller EXT-F2000PS-..
Brief description 2
Technical data 3
Safety notes 3
Product features 3
Buttons and LCD display 3
Operation 4
Dimensions [mm] 5
Mechanical installation 5

Fan Coil Controller EXT-F2000PS-F3
Electrical connection 2-pipe application, 1 x 3-point 7
Material list 2-pipe application, 1 x 3-point 7
Configuration 2-pipe application, 1 x 3-point 7
Parameter settings 2-pipe application, 1 x 3-point 8

Fan Coil Controller EXT-F2000PS-DF3
Electrical connection 4-pipe application, 2 x 3-point 9
Material list 4-pipe application, 2 x 3-point 9
Configuration 4-pipe application, 2 x 3-point 9
Parameter settings 4-pipe application, 2 x 3-point 10

Fan Coil Controller EXT-F2000PS-21
Electrical connection 2-pipe application, 1 x On-off 13
Configuration 2-pipe application, 1 x On-off 13
Electrical connection 4-pipe application, 2 x On-off 13
Configuration 4-pipe application, 2 x On-off 13
Material list 13
Parameter settings 14

Brief description

EXT-F2000PS-F3

- **For 2-pipe applications (Change-Over)**
- Standard type with buttons and LCD display
- Voltage supply: AC 230V
- Fan outputs: AC 230V, High / Mid / Low
- **1 Valve output: AC 230 V, 3-point**

EXT-F2000PS-DF3

- **For 4-pipe applications**
- Standard type with buttons and LCD display
- Voltage supply: AC 230V
- Fan outputs: AC 230V, High / Mid / Low
- **2 Valve outputs: AC 230V, 3-point**

EXT-F2000PS-21

- **For 2-pipe and 4-pipe applications**
- Standard type with buttons and LCD display
- Voltage supply: AC 230V
- Fan outputs: AC 230V, High / Mid / Low
- **2 Valve outputs: AC 230V, On-off**

Warranty period

This is a commercial product not manufactured by Belimo (commercial product in accordance with clause 13 of the General Business Conditions).
The warranty period is 2 years from the date of delivery.

Technical data

Temperature controller for controlling Fan Coil devices:
- **Fan control with three-stage output (Low / Mid / High)**
- **Control of heating and/or cooling valve with digital output**

Electrical data	Nominal voltage	AC 230V ±10%, 50/60 Hz
	Load	Max. 1 A per terminal
	Connections	Terminal block 1 … 7/9: 1.5 mm²
Outputs	Fan control	3-stage AC 230V (Low / Mid / High)
	Valve control	– 3-point AC 230V (EXT-F2000PS-F3 / -DF3) – On-off AC 230V (EXT-F2000PS-21)
Functional data	Temperature sensor	Type NTC, 5 k
	Measuring range	5 … 35°C
	Measuring accuracy	±0.5 K @ 25°C
	Frost protection limit	5°C
	Ambient conditions	
	– Operation	0 … +50°C / 0 … 95% rH (non-condensing)
	– Transport and storage	–40 … +50°C / 20 … 95% rH (non-condensing)
Dimensions / Weight / Installation	Dimensions (H x W x D)	130 x 90 x 32 mm
	Weight	260 g
	Type of installation	Surface-mounted

Safety notes

- **The controller is not allowed to be used outside the specified field of application, especially in aircraft or in any other airborne means of transport.**
- **Caution: Power supply voltage!**
- **It may only be installed by suitably trained personnel. Any legal regulations or regulations issued by government agency authorities must be observed during assembly.**
- **The device contains electrical and electronic components and is not allowed to be disposed of as household refuse. All locally valid regulations and requirements must be observed.**

Product features

LCD display For displaying and inputting room temperature, setpoint and system statuses

Operating buttons For adjusting the room temperature setpoint and for the simple and secure operation of the connected components

Building protection If the room temperature drops below 5°C, the system switches on in order to prevent possible damage to the building (activation via parameter)

Locking functions In order to prevent incorrect operation, a number of different settings can be protected against manipulation

Buttons and LCD display

Buttons

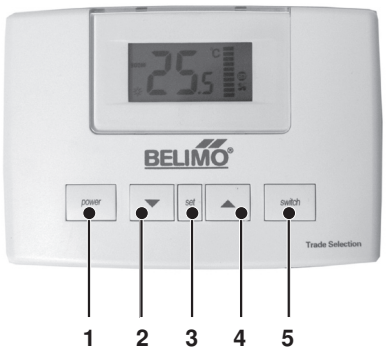

1	On / Off
2	Change value (–)
3	Fan speed "Manual" / "Auto"
4	Change value (+)
5	Operating mode

Buttons and LCD display *(continued)*

LCD display

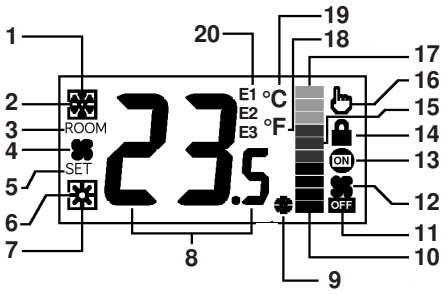

1	Locked when in cooling mode
2	Cooling
3	Room temperature
4	Fan
5	Operating mode
6	Heating
7	Locked when in heating mode
8	Room temperature
9	Frost protection active
10	Fan level 1 (Low)
11	Off
12	Fan status
13	Visible with Valve Open Invisible with Valve Closed
14	Setpoint adjustment locked
15	Fan level 2 (Mid)
16	Fan level Manual
17	Fan level 3 (High)
18	Fahrenheit
19	Celsius
20	Setting

Operation

Display at time of switch-on
After the power has been switched on, the setpoint adjustment appears in the display for approximately 6 seconds, followed by the current room temperature.

Setting the temperature setpoint
With ▲ or ▼. The display flashes for 6 seconds, after which the new value is applied.

Locking the temperature setpoint
Keep the ▲ and ▼ keys pressed down together for 6 seconds.
The display 🔒 signals that the selection of the temperature setpoint is locked.

Unlocking the temperature setpoint
Keep the ▲ and ▼ keys pressed down together for 6 seconds.
The display 🔒 goes out.

Setting operating mode
3 different operating modes can be selected by pressing the Switch key.
Heating ☼ – Cooling ❄ – Fan ✱.

Operating mode Heating ☼
Room temperature < Setpoint Valve control mode, Fan automatic Low / Mid / High.
Room temperature > Setpoint Valve closed, Fan Low.
The fan can be overridden with the Set key (Display ☝).

Operating mode Cooling ❄
Room temperature > Setpoint Valve control mode, Fan automatic Low / Mid / High.
Room temperature > Setpoint Valve closed, Fan Low.
The fan can be overridden with the Set key (Display ☝).

Operating mode Fan ✱
The fan can be overridden with the Set key (Display ☝). The individual fan stages can be selected with the Switch key.
ATTENTION: During the airing mode, the valves remain closed and the setpoint adjustment is locked.

Locking the operating mode Heating or Cooling
Keep the Switch key pressed down in Heating or Cooling mode for 6 seconds.
The display ❄ or ☼ signals that the selection of the operating mode is locked.
ATTENTION: The fan mode cannot be locked!

Unlocking the operating mode Heating or Cooling
Keep the Switch key pressed down in Heating or Cooling mode for 6 seconds.
The display ❄ or ☼ signals the corresponding Automatic mode.

Information
The symbol ON appears as soon as a valve is opened.

Dimensions [mm]

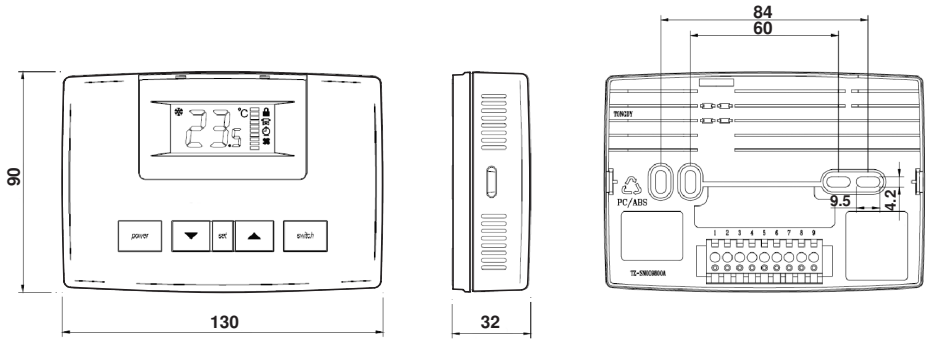

Mechanical installation

Note
Do not mount behind doors or in corners.
Avoid direct sunlight and draughts.

Using a blunt tool, remove the front plate from the installation base by pressing the two clips on the short side inward. Afterwards, the front plate can be carefully pulled off.

The room temperature controller is ideally mounted at a height ranging from 1.2 to 1.4 m above the floor.

Connection

Once the base plate has been mounted, the electrical connections can be set up in accordance with the wiring diagram.

Mounting the front plate

Carefully insert the front plate until the two latches on the sides snap into place.

Electrical connection 2-pipe application, 1 x 3-point

Wiring diagram

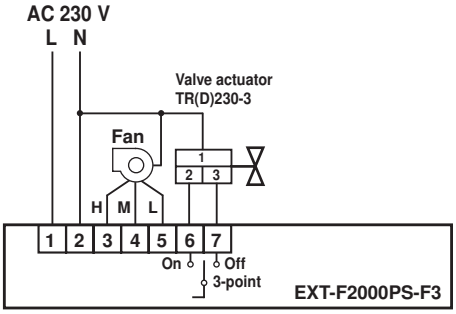

Controller		
Terminal 1/2	Supply AC/DC 230 V	
Terminal 3	Fan level High	
Terminal 4	Fan level Mid	
Terminal 5	Fan level Low	
Terminal 6	3-point valve actuator On	
Terminal 7	3-point valve actuator Off	
Cable colours Actuator		
1 = blue	2 = brown	3 = white

Material list 2-pipe application, 1 x 3-point

Room temperature controller, AC 230V EXT-F2000PS-F3 – 1 Valve control 3-point

Valve actuator, AC 230V / 3-point TRD230-3

Suitable valve types
R20xK – Characterised control valve 2-way internal thread DN10
R30xK – Characterised control valve 3-way internal thread DN10
R40xK – Characterised control valve 2-way outer thread DN10
R50xK – Characterised control valve 3-way outer thread DN10

Valve actuator, AC 230V / 3-point TR230-3

Suitable valve types
R2xx – Characterised control valve 2-way internal thread DN15/20
R3xx – Characterised control valve 3-way internal thread DN15/20
R4xx – Characterised control valve 2-way outer thread DN15/20
R5xx – Characterised control valve 3-way outer thread DN15/20

Valve/actuator combinations
R2BR-6.. – Zone valve with actuator 2-way internal thread DN10-20
R3BR-6.. – Zone valve with actuator 3-way internal thread DN10-20

Configuration 2-pipe application, 1 x 3-point

DIP switch

DIP	DIP switch OFF	DIP switch ON
1	* **Operation**	Setting the parameters
2	* **Celsius**	Fahrenheit

*** Default**

Parameter settings 2-pipe application, 1 x 3-point

Caution
Before changing the parameters, check the following table to determine whether such a change is really necessary.

- Switch the power off to the controller and carefully remove the front plate.
- Set DIP switch 1 to ON in order to access Parameters mode.
- Mount the front plate back on and switch on the power.

- The Switch key is used for switching between the individual parameters. The value of the selected parameter can be changed with the ▲ and ▼ keys.
- The display flashes for 6 seconds, after which the new value is applied.

- After completing the settings, switch the power off to the controller and carefully remove the front plate.
- Set the DIP switch 1 back to OFF.
- Mount the front plate back on and switch on the power.

Display	Parameters	Range	Default setting
E1	Temperature display correction	±3 K	0 K
E2	Minimum setpoint	0°C … Maximum	5°C
E3	Maximum setpoint	Minimum … 50°C	35°C
E1E2	Building protection	0 – Frost monitoring switched off 1 – Frost monitoring active	0
E1E3	Behaviour after power failure	0 – Switching on the controller 1 – Switching off the controller 2 – Retaining last status	2
E2E3	Behaviour of the fan with the valve closed (only in Auto mode)	1 – Stop 2 – Low when cooling and Stop when heating 3 – Low when heating and Stop when cooling 4 – Low when heating and cooling	4
E1E2E3	Time delay between fan stages	0.5 … 90 The greater the value, the slower the switching	20
E1 + ▬	Control speed of the valve (I portion)	0.5 … 99.5 The greater the value, the slower the stabilisation	25
E2 + ▬	Button sounder	0 – switched off 1 – switched on	0
E3 + corresponding bar	Running time of the 3-point valve actuator	10 … 420 s	100 s
	LCD display	Range	Time
	XY (number)	10 … 99 seconds	XY seconds
	XY (number) + ▬	100 … 199 seconds	1XY seconds
	XY (number) + ▬	200 … 299 seconds	2XY seconds
	XY (number) + ▬	300 … 399 seconds	3XY seconds
	XY (number) + ▬	400 … 420 seconds	4XY seconds

Reset to Default settings

- Switch the power off to the controller and carefully remove the front plate.
- Set DIP switch 1 to ON.
- Mount the front plate back on and switch on the power.

- Press down the Switch key for at least 25 seconds, until the controller switches itself off and back on again automatically.

- Afterwards, switch the power off to the controller and carefully remove the front plate.
- Set the DIP switch 1 back to OFF.
- Mount the front plate back on and switch on the power.

- All parameters are once again in their default settings

Electrical connection 4-pipe application, 2 x 3-point

Wiring diagram

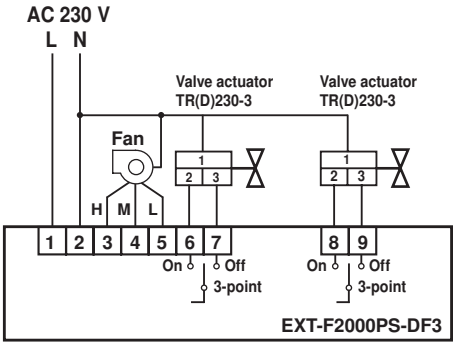

Controller		
Terminal 1/2	Supply AC/DC 230 V	
Terminal 3	Fan level High	
Terminal 4	Fan level Mid	
Terminal 5	Fan level Low	
Terminal 6	3-point valve actuator Heating On	
Terminal 7	3-point valve actuator Heating Off	
Terminal 8	3-point valve actuator Cooling On	
Terminal 9	3-point valve actuator Cooling Off	
Cable colours Actuator		
1 = blue	2 = brown	3 = white

Material list 4-pipe application, 2 x 3-point

Room temperature controller, AC 230V EXT-F2000PS-DF3 – 2 Valve controls 3-point

Valve actuator, AC 230V / 3-point TRD230-3

Suitable valve types
R20xK – Characterised control valve 2-way internal thread DN10
R30xK – Characterised control valve 3-way internal thread DN10
R40xK – Characterised control valve 2-way outer thread DN10
R50xK – Characterised control valve 3-way outer thread DN10

Valve actuator, AC 230V / 3-point TR230-3

Suitable valve types
R2xx – Characterised control valve 2-way internal thread DN15/20
R3xx – Characterised control valve 3-way internal thread DN15/20
R4xx – Characterised control valve 2-way outer thread DN15/20
R5xx – Characterised control valve 3-way outer thread DN15/20

Valve/actuator combinations
R2BR-6.. – Zone valve with actuator 2-way internal thread DN10-20
R3BR-6.. – Zone valve with actuator 3-way internal thread DN10-20

Configuration 4-pipe application, 2 x 3-point

DIP switch

DIP	OFF	ON
1	* **Operation**	Setting the parameters
2	* **Celsius**	Fahrenheit
3	2-pipe application → 1 Valve actuator 3-point	* **4-pipe application →** **2 Valve actuators 3-point**
4	Manual switching Cooling/Heating	* **Automatic switching** **Cooling/Heating**

*** Default**

Note
DIP3 = OFF – Utilisation with only one 3-point valve actuator: Automatic switching between Cooling/Heating is locked.
DIP4 has no function.

Parameter settings 4-pipe application, 2 x 3-point

Caution
Before changing the parameters, check the following table to determine whether such a change is really necessary.

- Switch the power off to the controller and carefully remove the front plate.
- Set DIP switch 1 to ON in order to access Parameters mode.
- Mount the front plate back on and switch on the power.

- The Switch key is used for switching between the individual parameters. The value of the selected parameter can be changed with the ▲ and ▼ keys.
- The display flashes for 6 seconds, after which the new value is applied.

- After completing the settings, switch the power off to the controller and carefully remove the front plate.
- Set the DIP switch 1 back to OFF.
- Mount the front plate back on and switch on the power.

Display	Parameters	Range	Default setting
E1	Temperature display correction	±3 K	0 K
E2	Minimum setpoint	0°C … Maximum	5°C
E3	Maximum setpoint	Minimum … 50°C	35°C
E1E2	Building protection	0 – Frost monitoring switched off 1 – Frost monitoring active	0
E1E3	Behaviour after power failure	0 – Switching on the controller 1 – Switching off the controller 2 – Retaining last status	2
E2E3	Behaviour of the fan with the valve closed (only in Auto mode)	1 – Stop 2 – Low when cooling and Stop when heating 3 – Low when heating and Stop when cooling 4 – Low when heating and cooling	4
E1E2E3	Time delay between fan stages	0.5 … 90 The greater the value, the slower the switching	20
E1 +	Control speed of the valve (I portion)	0.5 … 99.5 The greater the value, the slower the stabilisation	25
E2 +	Button sounder	0 – switched off 1 – switched on	0
E3 +	Zero energy band Heating	1 … 4 K	1.5 K
E1E2 +	Zero energy band Cooling	1 … 4 K	1.5 K
E1E3 + corresponding bar	Running time of the 3-point valve actuator Heating	10 … 420 s	100 s
	LCD display	Range	Time
	XY (number)	10 … 99 seconds	XY seconds
	XY (number) +	100 … 199 seconds	1XY seconds
	XY (number) +	200 … 299 seconds	2XY seconds
	XY (number) +	300 … 399 seconds	3XY seconds
	XY (number) +	400 … 420 seconds	4XY seconds
E2E3 + corresponding bar	Running time of the 3-point valve actuator Cooling	10 … 420 s	100 s
	LCD display	Range	Time
	XY (number)	10 … 99 seconds	XY seconds
	XY (number) +	100 … 199 seconds	1XY seconds
	XY (number) +	200 … 299 seconds	2XY seconds
	XY (number) +	300 … 399 seconds	3XY seconds
	XY (number) +	400 … 420 seconds	4XY seconds

Parameter settings 4-pipe application, 2x 3-point

Reset to Default settings

- Switch the power off to the controller and carefully remove the front plate.
- Set DIP switch 1 to ON.
- Mount the front plate back on and switch on the power.

- Press down the Switch key for at least 25 seconds, until the controller switches itself off and back on again automatically.

- Afterwards, switch the power off to the controller and carefully remove the front plate.
- Set the DIP switch 1 back to OFF.
- Mount the front plate back on and switch on the power.

- All parameters are once again in their default settings

Electrical connection 2-pipe application, 1 x On-off

Wiring diagram

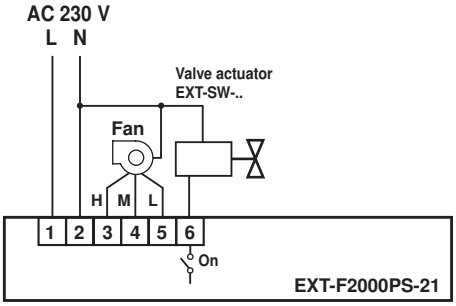

Controller	
Terminal 1/2	Supply AC/DC 230 V
Terminal 3	Fan level High
Terminal 4	Fan level Mid
Terminal 5	Fan level Low
Terminal 6	On-off valve actuator
Terminal 7	Do not use

Configuration 2-pipe application, 1 x On-off

DIP switch

DIP	OFF	ON
1	* **Operation**	Setting the parameters
2	* **Celsius**	Fahrenheit
3	**2-pipe application → 1 Valve actuator**	* 4-pipe application → 2 valve actuators
4	**Manual switching Cooling/Heating**	* Automatic switching Cooling/Heating

*** Default**

Note
DIP3 = OFF – Utilisation with only one on-off valve actuator: Automatic switching between Cooling/Heating is locked.
DIP4 has no function.

Electrical connection 4-pipe application, 2 x On-off

Wiring diagram

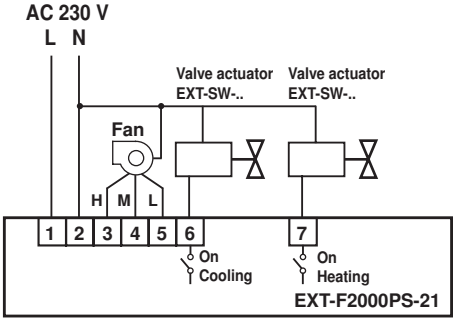

Controller	
Terminal 1/2	Supply AC/DC 230 V
Terminal 3	Fan level High
Terminal 4	Fan level Mid
Terminal 5	Fan level Low
Terminal 6	On-off valve actuator Cooling
Terminal 7	On-off valve actuator Heating

Configuration 4-pipe application, 2 x On-off

DIP switch

DIP	OFF	ON
1	* **Operation**	Setting the parameters
2	* **Celsius**	Fahrenheit
3	2-pipe application 1 Valve actuator	* **4-pipe application 2 Valve actuators**
4	Manual switching → Cooling/Heating	* **Automatic switching → Cooling/Heating**

*** Default**

List of materials

Room temperature controller, AC 230V EXT-F2000PS-21 – 1 or 2 Valve control On-off

Valve/actuator combinations
EXT-SW-E152V … E252V- – Zone valve with rotary actuator 2-way internal thread DN15 … 25
EXT-SW-E153V … E253V- – Zone valve with rotary actuator 3-way internal thread DN15 … 25
EXT-SW-G152V … E252V- – Zone valve with rotary actuator 2-way external thread DN15 … 25
EXT-SW-G153V … E253V- – Zone valve with rotary actuator 3-way external thread DN15 … 25

Parameter settings

Caution
Before changing the parameters, check the following table to determine whether such a change is really necessary.

- Switch the power off to the controller and carefully remove the front plate.
- Set DIP switch 1 to ON in order to access Parameters mode.
- Mount the front plate back on and switch on the power.

- The Switch key is used for switching between the individual parameters. The value of the selected parameter can be changed with the ▲ and ▼ keys.
- The display flashes for 6 seconds, after which the new value is applied.

- After completing the settings, switch the power off to the controller and carefully remove the front plate.
- Set the DIP switch 1 back to OFF.
- Mount the front plate back on and switch on the power.

Display	Parameters	Range	Default setting
E1	Temperature display correction	±3 K	0 K
E2	Minimum setpoint	0°C … Maximum	5°C
E3	Maximum setpoint	Minimum … 50°C	35°C
E1E2	Building protection	0 – Frost monitoring switched off 1 – Frost monitoring active	0
E1E3	Behaviour after power failure	0 – Switching on the controller 1 – Switching off the controller 2 – Retaining last status	2
E2E3	Behaviour of the fan with the valve closed (only in Auto mode)	1 – Stop 2 – Low when cooling and Stop when heating 3 – Low when heating and Stop when cooling 4 – Low when heating and cooling	4
E1E2E3	Time delay between fan stages	0.5 … 90 The greater the value, the slower the switching	20
E1 +	Button sounder	0 – switched off 1 – switched on	0
E2 +	Zero energy band Heating	1 … 4 K	1.5 K
E3+	Zero energy band Cooling	1 … 4 K	1.5 K
E1E2 +	Hysteresis for opening the valve	0 … 5 K	0.5 K
E1E3 +	Hysteresis for closing the valve	0 … 5 K	0.5 K
E2E3 +	Selection of operating mode	0 – Heating/Cooling 1 – Heating/Cooling/Ventilation	1

Reset to Default settings

- Switch the power off to the controller and carefully remove the front plate.
- Set DIP switch 1 to ON.
- Mount the front plate back on and switch on the power.

- Press down the Switch key for at least 25 seconds, until the controller switches itself off and back on again automatically.

- Afterwards, switch the power off to the controller and carefully remove the front plate.
- Set the DIP switch 1 back to OFF.
- Mount the front plate back on and switch on the power.

- All parameters are once again in their default settings

All inclusive.

Headquarters

BELIMO Holding AG
Brunnenbachstrasse 1
CH-8340 Hinwil
Tel. +41 (0)43 843 61 11
Fax +41 (0)43 843 62 68
info@belimo.ch
www.belimo.com

Subsidiaries, Representatives and Agencies

Agentina
Australia
Bahrain
Belgium
Bosnia-Herzegovina
Brazil
Bulgaria
Canada
Chile
Croatia
Cyprus
Czech Republic
Denmark
Egypt
Estonia
Finland
France
Great Britain
Germany
Greece
Hong Kong
Hungary
Iceland
India
Indonesia
Ireland
Israel
Italy
Japan
Jordan
Kuwait
Latvia
Lebanon
Liechtenstein
Lithuania
Luxembourg
Malaysia
Mexico
Morocco
Netherlands
New Zealand
Norway
Oman
Pakistan
People's Republic of China
Philippines
Poland
Portugal
Qatar
Republic of Korea (South Korea)
Rumania
Russia
Saudi Arabia
Singapore
Slovakia
Slovenia
South Africa
Spain
Sweden
Switzerland
Taiwan
Turkey
Ukraine
United Arab Emirates
United States of America

Belimo worldwide: www.belimo.com

BELIMO®